修订 REV	标记 MARK	修改摘要 REVISION DESCRIPTION	签名 SIGNA TURE	日期 DATE
A0		NEW RELEEASE	WANG	2015-03-12

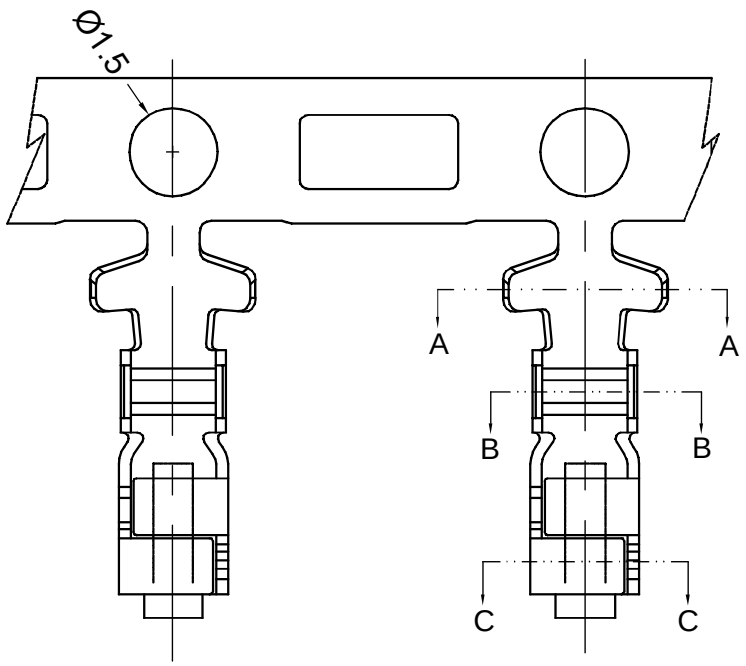

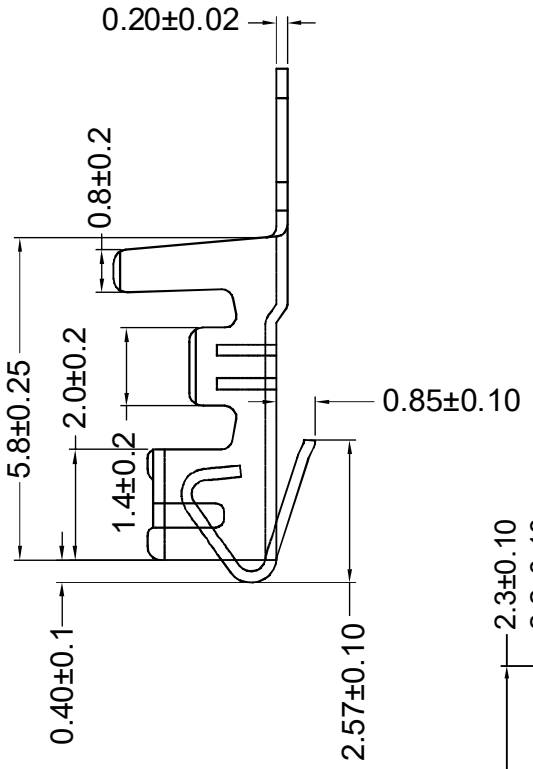

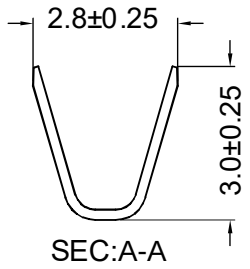

SEC:A-A

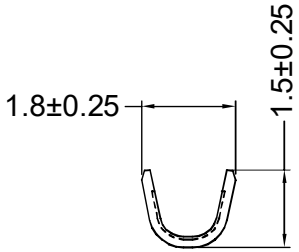

SEC:B-B

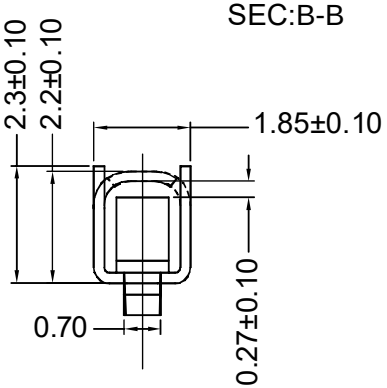

SEC:C-C

Ordering information & Specifications:

Part NO.	Wire Range	Insulation O.D.	Material	Finish	Qty/reel
HDGC2501-TP	AWG#22-#28	1.90mm(max)	Phosphor Bronze	Tin over Nickel	9,000 PCS
HDGC2501-GP	AWG#22-#28	1.90mm(max)	Phosphor Bronze	Gold over Nickel	9,000 PCS

Optional Gold plating available but MOQ requested

深圳市华德共创科技有限公司
Shenzhen Huade co-create Technology Co.,LTD
TEL：0755-27129737 FAX：0755-29940187

-TOLERANCES- UNLESS OTHERWISE SPECIFIED 公差参数表						TITLE: 产品名称： 2.50mm Pitch Crimp Terminal			
X.X	±0.30	X.X°	±3°	APPD: 核准：	XIE	PART NO: 产品编号：	HDGC2501-T		
X.XX	±0.30	X.XX°	±2°	CHECK: 校对：	WANG	DATE	SCALE	UNIT	CODE NUMBER
X.XXX	±0.10	X.XXX°	±1°	DRAW: 绘图：	WANG	2015-03-12	1:1	mm	A001